ComXim

Turntable Introduction

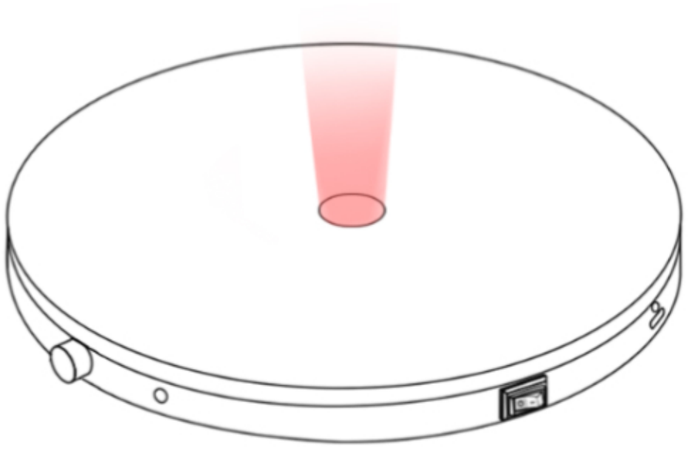

Shenzhen ComXim Technologies Co., Ltd.
www.comxim.com

What's in theBox?

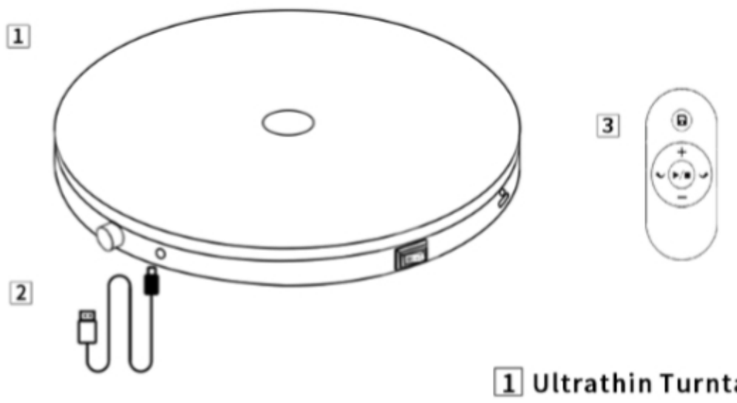

1 Ultrathin Turntable
2 Power Cable
3 Remote control

Turntable Introduction

The ComXim turntable is specially designed for product display. It can support to 11 pounds and the speed and direction of rotation can be adjusted via the remote controller, the knob can change the colors and mode of light, making crystal or glass products displaying more convenient.

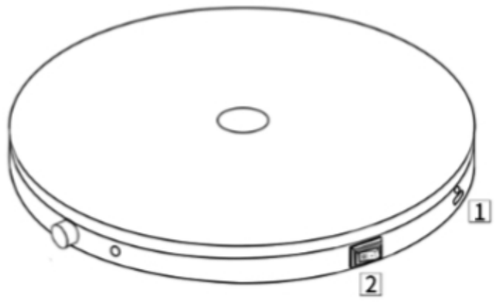

1 Power Port
2 On / Off Switch

Specifications

Product Name	Remote control ultrathin turntable
Power Output	5VDC / 500MA
Dimensions	Diameter 7.9inches, height 0.96inches
Speed	22s-60s/circle
Max Load	11lbs
Product Gross Weight	0.72lbs
Rotation Control	Speed and Start/pause
Noise	＜55 (db)
Main Materials	ABS

Setting Up the Turntable

Step 1: Connect the power cord to the adapter.

Step 2: Insert the power cord into the socket and turntable/or insert 3 AAA batteries

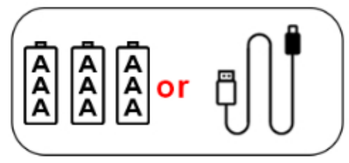

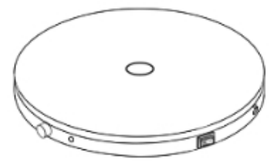

Step 3: Open the turntable.

Remote Controller Introduction

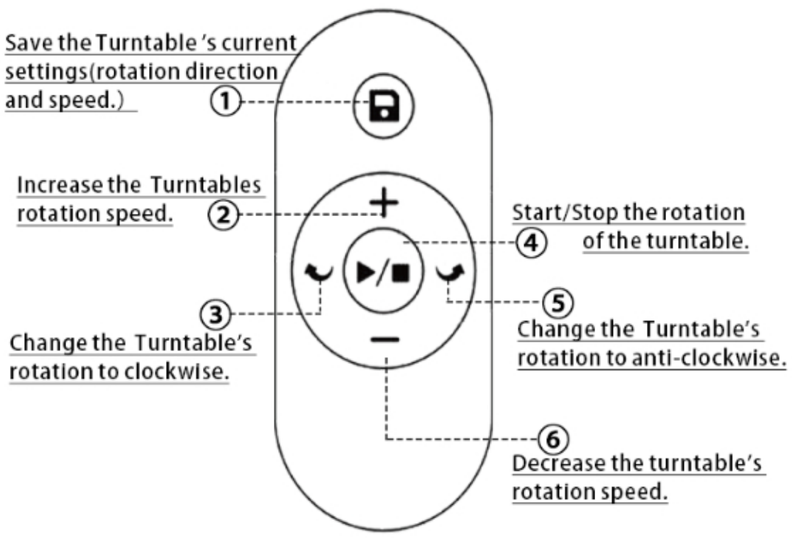

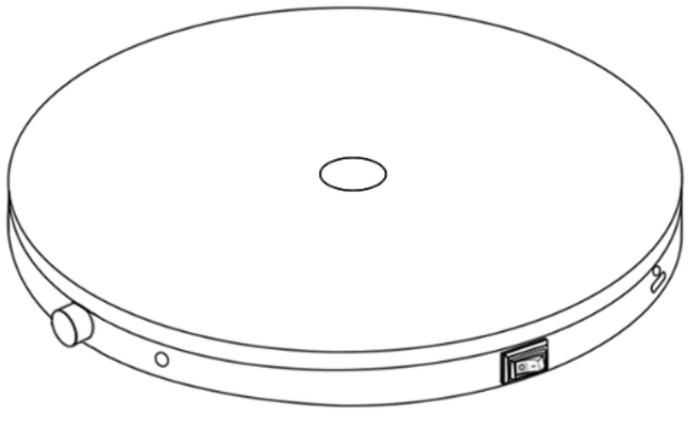

Supports 21 colors of glowing, and features a 7-color alternating automatic breathing mode.

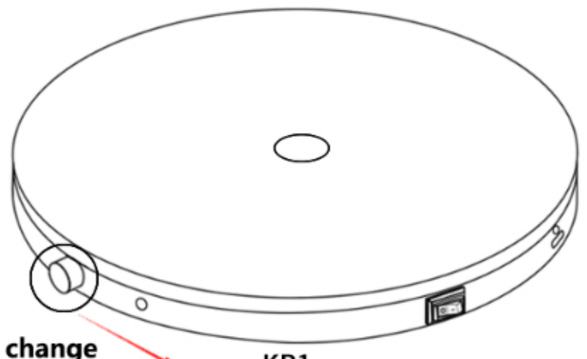

knob to change the colors and mode

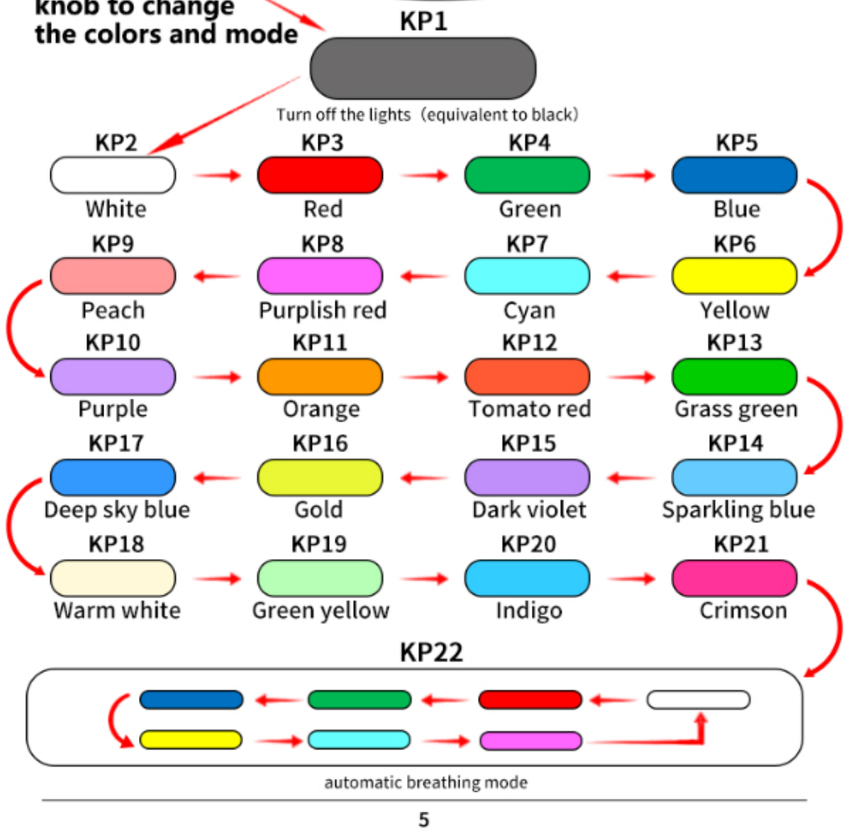

automatic breathing mode

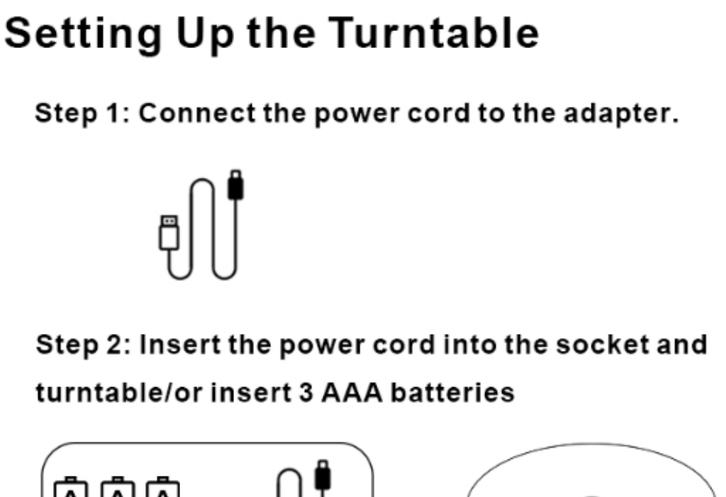

Warranty Card
User's name:
Tel:
Add:
Item No:
Shop's name:
Purchase time:
Maintenance record:

深圳康信技术有限公司
Shenzhen ComXim Technologies Co., Ltd.
Website: www.comxim.com
执行标准:Q/KXJS 001-2017 FC CE